Benefit of Nonlinear Resistive Field Grading Materials on Medium Voltage Bushing by Finite Element Modeling (Flux 2D) vs Experimental Partial Discharge Measurements

R Metz, M Hassanzadeh

Benefit of Nonlinear Resistive Field Grading Materials on Medium Voltage Bushing by Finite Element Modeling (Flux 2D) *vs* Experimental Partial Discharge Measurements

R. Metz
Laboratoire Charles Coulomb, UMR CNRS 5221 & Université Claude Bernard (Lyon1)
Place Eugène Bataillon, Université Montpellier
CC026
F-34095 Montpellier Cedex 5 – France

M. Hassanzadeh
Schneider Electric
Energy Management – Power System
Site Technopole 3A17
28 rue Henri Tarze
38050 Grenoble Cedex 9 - France

***Abstract*- The effect of resistive field grading coatings on the electric field distribution in a medium voltage bushing has been studied. A typical coating is obtained by applying a commercial resistive field grading material and a conductive varnish that we both have previously electrically characterized. The electric field distribution over the bushing surface was computed and analyzed using a finite element method software (Flux 2D). The electric field enhancements at its critical points with and without field grading material were considered and confronted with experimental partial discharge detection. The complementary between the field grading material and the conductive varnish is highlighted: a special care of the true capability of the conductive layer to withdraw the electrical charges is stressed out.**

I. Introduction

Electric field grading materials (FGM) are commonly used in different applications like in rotating machines for corona protection [1-2], in power electronics [3] or electric equipment [4-10] to manage high electrical field in critical area. As a part of *insulation coordination*, *i.e.* engineering to achieve the best technical and economic compromise in the protection of people and materials against overvoltage that may originate from the network or lightning [11], our interest is to better understand the behavior of a commercial field grading painting on a bushing since its breakdown due to the high electrical field and or partial discharge phenomena is one of the major contributors to the transformer failures [12]. The first step of this work was to characterize electrically a corona protection kit made of a conductive and semi-conductive varnishes, the latter being the so-called FGM. Then, we simulated the bushing with and without the deposition of the varnishes on a finite element method software: Flux 2D. Different parameters of the model have been studied: the length and the thickness of the FGM but in a more original way the electrical conduction of the conductive varnish. A comparison between experimental and simulation results has been carried out and allowed to validate the modeling of the bushing and shows limitations of this assessment.

II. Bushing Simulation with Flux 2D

A. Geometry depiction

A typical bushing has been selected, an isolated device that allows an electric conductor to pass safely through a grounded conducting barrier. Since the 1965s, bushings are typically made from thermoset resin materials. Selected bushing is used in medium voltage network with 24 kV_{rms} rated voltage. The figures 1 and 2 illustrate its geometry. It is composed of a 455mm long cylindrical central copper conductor, 38mm in radius. The central conductor is over molded with a 16mm thick insulating epoxy with a length of 450mm. To avoid any point effect, its superior angle is rounded with a radius of 3mm. The epoxy insulator is coated with a conductive and the FGM. A conductive layer of 50µm thick (length of 18mm) rests on the surface of the base of the bushing on the top of which the FGM layer is deposited (Figure 1). An 8mm long and 50µm thick FGM layer overlaps a part of the metallization layer (Figure 2). The part of it covering the epoxy has a length of 20mm and a thickness of 50µm. (In the rest of the document, the length of the FGM does not take into account the 8mm which overlaps the metallization layer, *e.g.* a 20 mm FGM length involves in fact a total length of 20 + 8 = 28 mm). The conductive layer is grounded (V = 0V) (Figure 3).

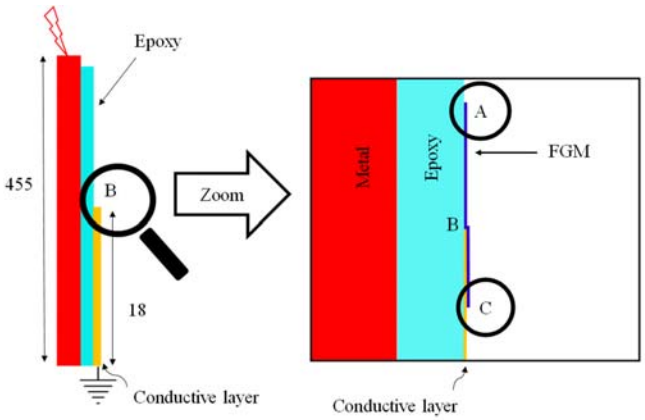

Fig. 1. General depiction of the bushing model: axisymmetric view (FGM: Field Grading Material)

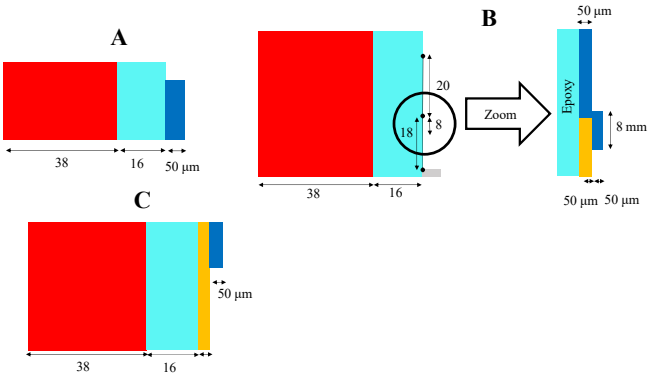

Fig. 2. Details of the 3 specific parts depicted in Figure 1

B. Flux 2D parameters

The physics section of Flux2D permits to input the physical parameters of the different bushing components. We simulate materials in 2D face regions. The central conductor is set as conductor *i.e.* perfect conductor in Flux 2D. The applied voltage is $\frac{24000}{\sqrt{3}} \times 1.1$ V ~ 15kV$_{rms}$ between the phase and the ground. (24kV$_{rms}$ is the potential between two phases, it is divided by $\sqrt{3}$ to calculate the voltage between phase and earth. A security margin of 10% is taken to consider grid voltage variations).

Epoxy regions are defined in Flux 2D as *dielectric* and *non-conducting region* with a relative permittivity set to 4. The semi-conductive varnish is defined as *dielectric* and *conductive region*.

In order to characterize both the metallization layer and the FGM, several specimens have been prepared by depositing layers on an aluminum substrate in a controlled fashion (Doctor blade). Sheet thickness of 40 and 167 ± 4µm are prepared for the conductive layer and the FGM respectively. The dielectric characteristics of the samples were obtained using different systems. In the range 0V – 1kV, a guarded cell connected to a high voltage DC power supply and picoammeter (Keithley electrometer 6517B) is carried out. A guard ring configuration is used for the measurements in order to exclusively evaluate volume conductivity (Each voltage step is obtained after holding the voltage constant for 30 minutes (polarization) and 0V for an extra 30 minutes (depolarization)). Surface resistance is measured by a four-point probe system (Ossila) and the real permittivity and dielectric loss are obtained by a broadband dielectric spectrometer Novocontrol alpha analyzer over a frequency range from 1 Hz to 1MHz with the latter being obtained thanks to a thin film layer of gold (~ 20 nm) deposited in advance by sputtering. For the FGM, the losses angle and the permittivity have been measured at 20°C up to 1 MHz (1V$_{rms}$). The loss (tanδ) and the real permittivity (ε′) were used in Flux 2D for *electro-harmonic simulations*. For the metallization layer, the permittivity was out the range of the impedance analyzer with a value greater than 10000. At first, the conductive varnish was simulated as *conductor i.e.* perfect conductor. However, and subsequently, its resistance was taken into account. Its surface resistance is indeed not negligible : R_s = 104 ± 3 Ω/sq (measured in the 3.5 10^{-3} – 3.8 10^{-3} V range).

C. Critical points

Numeric *sensors* (Flux 2D) have been placed on the triple points to evaluate the local electric field modulus $\|\vec{E}\|$ (mesh nodes spaced 5µm apart).

As depicted in Figure 1, three critical points are assessed:

- The initial triple point: B, the pristine bushing without any corona protection at the interface between air, the epoxy and the conductive layer. And two new critical points following the disappearance of the initial triple point, B:
- Point A is at the top of the FGM layer, at the junction between the epoxy, the air and the FGM.
- Point C is confined at the interface between the FGM, the metallization and the air.

III. Electro Harmonic Simulation Results

A. Dielectric properties of the corona kit protection

The ρ(E) characteristic of the FGM varnish has been measured and the values reported in Figure 3. It shows that the FGM has a non-linear characteristic: the resistivity decreases when the electric field increases.

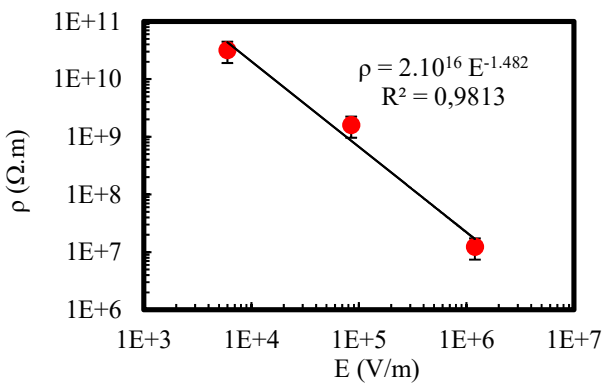

Fig. 3. Resistivity in function of the applied electric field on the FGM (Electrode diameter: 54mm and thickness 167 µm) – 298K

At 50Hz, the dielectric loss factor equals 0.088 ± 0.001 and the real part of the complex permittivity : 9.12 ± 0.05.

Concerning the conductive varnish, our experimental measures from 4 point measurement lead to a volume resistivity of 104 Ω/sq x 150 10^{-6} = 0.012 Ω.m, an order of magnitude lower that

the value measured by the dielectric spectrometer analyzer : 0.14 Ω.m. This discrepancy surprised us and motivated us to investigate further.

B. Simulation results

We have studied the influence of the true conductivity of the conductive varnish on the stress grading capacity of a FGM 20 mm long and 50 µm thick. The properties of the metallization layer have been tuned to study the behavior of either an insulator (weak permittivity and high resistivity) or a conductor (high permittivity and low resistivity). Figure 4 shows that a drop of the permittivity of the metallization layer decreases the electric field at point A while the resistivity of the layer increases. An opposite behavior is observed in the case of point C (Figure 5).

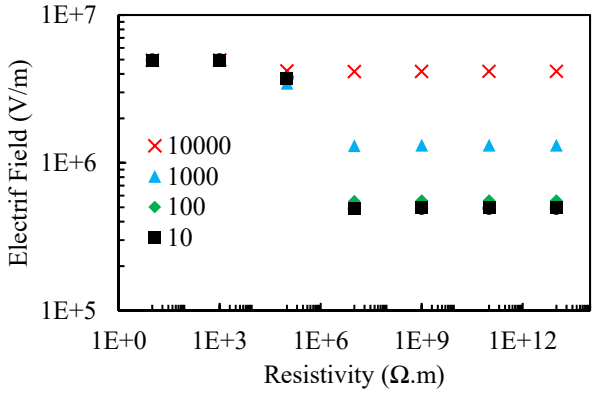

Fig. 4. Electric Field in the air at point A in function of the applied voltage for different permittivity of the metallization layer (there is an overlapping of the symbols up to a permittivity of 10)

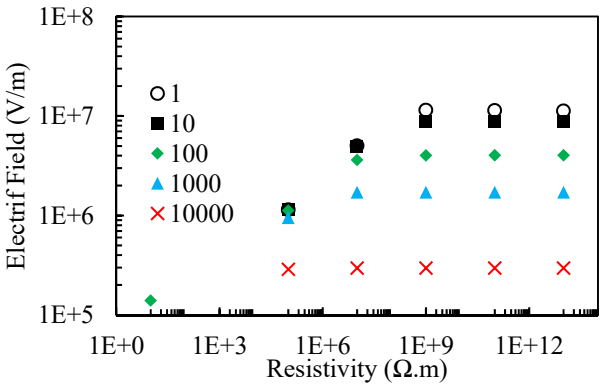

Fig. 5. Electric Field in the air at point C in function of the applied voltage for different permittivity of the metallization layer

The contrary behavior at the A and C points might be explained by an equivalent circuit which models both layer (Figure 6).

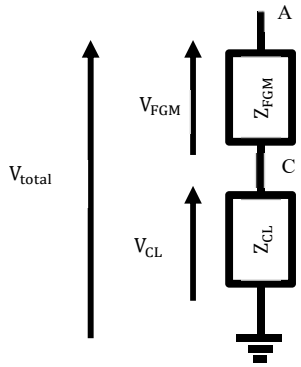

Fig. 6. Equivalent circuit of the FGM and the conductive layer (CL) and both triple points: A and C.

From Figure 6,

$$V_{FGM} = V_{total} \times \frac{Z_{FGM}}{Z_{FGM} + Z_{CL}}$$

And Kirchhoff's voltage law allows to express:

$$V_{CL} = V_{total} - V_{FGM}$$

Therefore, when the permittivity ε'_{CL} increases, the capacitance C_{CL} increases, the impedance Z_{CL} drops since $Z_{CL} = R + \frac{1}{jC_{CL}\,\omega}$ Consequently, V_{FGM} rises and V_{CL} drops.

Also when the resistivity of the conductive layer rises (ρ_{CL}), the resistance R_{CL} increases, the impedance Z_{CL} increases and consequently V_{FGM} drops and V_{CL} rises.

IV. Experimental Results

Partial discharges have been measured in a real bushing in order to check the results of the trends observed by simulation according to IEC 60270. First, a bushing without FGM layer was studied. At 28kV, the level of partial discharge (PD) is around 2500pC. The extinction voltage is around 5kV. Thus, the use of an FGM layer is found compulsory to reduce the PD. This is in agreement with the simulations.

The application of an FGM layer with a length of 28mm (8mm overlapping on the metallization and 20mm on the epoxy) reduces PD level validating that the FGM layer improves the bushing performances. Two lengths of FGM layer were studied (the variations concern only the part of the FGM covering the epoxy): 8mm and 16mm. The increase of the length from 8 to 16mm improves drastically PD level at 28kV$_{rms}$ (Table I). The scattering of the experimental measures is rather important for the PD level at 28kV. In order to understand this dispersion, an experience was carried out to ensure the dependence of the results with the conductivity of the conductive layer.

TABLE I
PD LEVELS AND EXTINCTION VOLTAGES IN FUNCTION OF THE LENGTH OF THE FGM LAYER ON THE BUSHING. (n) DESIGNS THE NUMBER OF A SPECIFIC BUSHING, n = 1, 2 AND 3.

length	PD level at $28kV_{rms}$ (pC)	Extinction voltage (kV)
8mm (1)	340	10,7
8mm (2)	6500	11.0
8mm (3)	1400	10.0
16mm (1)	75	12.0
16mm (2)	140	11,5
16mm (3)	90	11,5

In Table II, we notice that polishing the metallization layer induces a reduction of the PD levels and an increase of the extinction voltages. In this case, we obtained the best results for our application. Polishing and cleaning the metallization layer increase the conductivity since the surface resistance decreases marginally from R = 209 ± 3 Ω/sq to 104 ± 3 Ω/sq. Simulations would require a resistivity drop several orders of magnitude higher to obtain minor benefits. The noticed effect of polishing may be more due to the reduction of the local field intensification from surface roughness, than a decrease in surface resistivity.

TABLE II
PD LEVELS AND EXTINCTION VOLTAGES FOR BUSHINGS WITH A POLISHED METALLIZATION LAYER AND A NON-POLISHED METALLIZATION LAYER.

	PD level at $28kV_{rms}$ (pC)	Extinction voltage (kV)
Without polishing	220	8
With polishing	5	24

This last experiment might explain the large deviation of the PD level observed on the previous analysis aiming at testing the length of the FGM.

V. CONCLUSION

A medium voltage bushing equipment was studied from both simulation and direct experimental measurements based mainly on quantification and extension of partial discharges: the complementary between the field grading material and the conductive varnish is highlighted.

It is rather difficult to correlate the simulation with the experimental results. From simulation, it is found that by depositing a field grading material, the initial triple point B (10^8 V/m (100 kV/mm) at 28kV) breaks up into two points: A and C. Within the geometric limits set up, the field might be lowered up to roughly 10kV/mm in the case of the point A while the field at the point C is up to ½ kV/mm. However, by playing on both the conductivity and the permittivity of the metallization layer, the simulations show that the field might increase at point C above 1 kV/mm. The triple point C might be an issue and this cannot be checked from the PD measurements. The experimental data are indeed based on the emergence of partial discharges, the origin of the latter being unknown: do the PD come from the A or C triple point? Since the polishing of the metallization leads to a substantially improvement of the partial discharges: 5 pC at 28kV with an extinction voltage of 24kV, this suggests to us that this parameter is of importance and may always interfere with the experimental results leading to a scattering of the experimental measurements of partial discharges.

ACKNOWLEDGMENT

The authors appreciate the financial support provided by Schneider Electric to the formation of Benjamin Dejean on Flux 2D. The authors would also like to thank Benjamin Dejean and Sébastien Dominguez for the preparation of the samples and part of their characterization. Several characterizations/experiments/measurements were performed with the support of the Balard Plateforme d'Analyses et de Caractérisation (PAC Balard). The authors thank Amine Geneste (PAC Balard) for technical support/assistance for the electrical measurements

REFERENCES

[1] A. Naeini, E. A. Cherney and S. H. Jayaram,,"Modified stress grading system for a 13.8 kV inverter-fed rotating machine", IEEE Transactions on Dielectrics and Electrical Insulation, vol. 26, no.4, pp.1261-69, 2019. doi: 10.1109/TDEI.2019.007991

[2] O. Barré and B. Napame, "The insulation for machines having a high lifespan expectancy, design, tests and acceptance criteria issues", Review, Machines, vol.5, n°7, MDPI, pp. 1-34, 2017. doi:10.3390/machines5010007

[3] C. Pelvillain, "Système d'encapsulation multicouche pour la gradation de potential dans les modules de puissance:apport des matériaux nanocomposites à cinductivité conrôlée, thèse Université Toulouse III, 2019. https://tel.archives-ouvertes.fr/tel-02006146

[4] A. Al-Gheilani, W. Rowe, Y. Li and K.L. Wong, "Stress control methods on a high voltage insulator: a review, Energy Procedia vol. 110, pp.95-100, 2017. doi: 10.1016/j.egypro.2017.03.112

[5] M. Letvenuk, M. Beninca, H. Noglik and P. Sheridan, "The use of shear responsive stress control mastics as void fillers in medium voltage cable accessories, DEIS, IEEE Electrical Insulation Magazine, vol.33, n°2, pp.1-19, 2017.

[6] F. Mauseth, H. Enoksen and S. Hvidsten,"Temperature and field dependence of field grading tubes for medium voltage XLPE cable joints", IEEE 24th Insul. Symp. Materials, Components and Diagnostics, pp.138-142, 2015.

[7] H. Ahmad, "Investigation of electrical properties of field grading materials based ZnO microvaristors, Cardiff University, 2017.

[8] M. Pradhan, H. Greijer, G. Eriksson and M. Unge, "Functional behaviors of electric field grading composite materials", pp.768-778, 2016 doi: 10.1109/TDEI.2015.005288

[9] S. Boucher, R. Chambard, M. Hassanzadeh, J. Castelon and R. Metz, "Study of the influence of nonlinear parameters on the efficiency of a resistive field grading tube for cable termination", pp. 2413-2420, vol.25, n°6, 2018 doi: 10.1109/TDEI.2018.007329

[10] S. Boucher, M. Hassanzadeh, S. Ananthakumar and R. Metz, "Interest of nonlinear ZnO/silicone composite materials in cable termination", pp. 83-88, vol.2, n°3, 2018 doi: 10.15406/mseij.2018.02.00039

[11] D. Fulchiron, "Surtensions et coordination de l'isolement", Cahier Technique Merlin Gerin n° 151, pp. 1-24, 1992.

[12] M. R. Hesamzadeh, N. Hosseinzadeh and P. Wolfs, "An advanced optimal approach for high voltage AC bushing design", IEEE Transactions on dielectrics and electrical insulation, IEEE Transactions on Dielectrics and Electrical Insulation, vol. 23, n°2, 2016.